Vertical extendible locking system

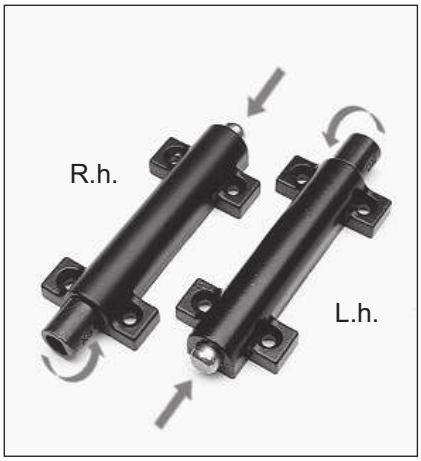

Description

Right or left-hand terminal vertical extendible locking system with steel push rod.
It slides into the bolt strike to lock the shutters. It is a convenient solution when you wish to avoid the installation of protruding catch pins.

Application

Recommended for door shutters and wherever the installation of catch pins is unsuitable. It must be positioned at the ends of the drive rod, which must be cut to the proper length so that it penetrates all the way to the bottom of the seat in the bolt, allowing no play.
The bolt extends all the way with a rod rotation of 90°.

- If the rod rotates 180°, the vertical bolt must be fitted with a rotation compensator.

Mounting

Use four 4x30 mm screws with thread suitable for the shutter material.

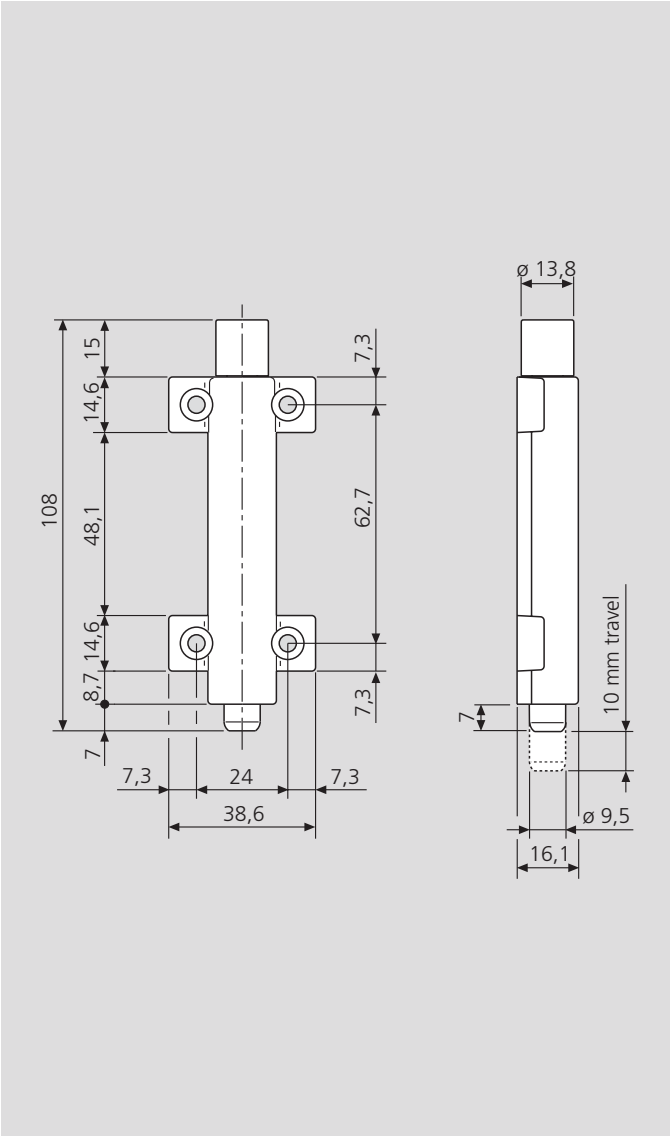

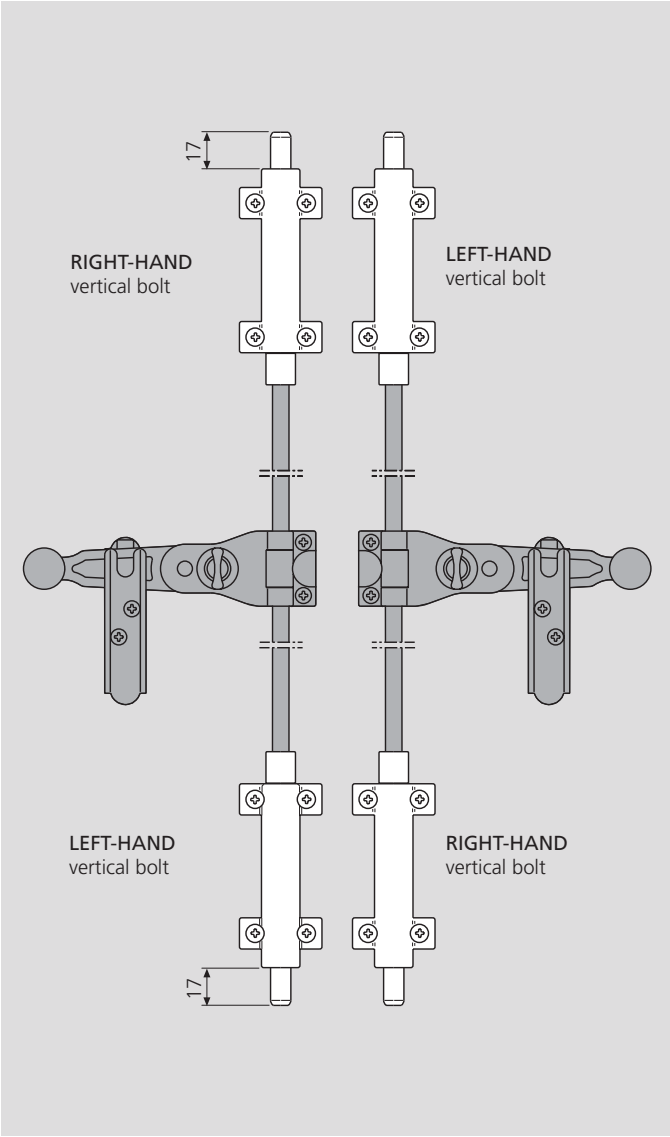

Order specifications

Ref.	Black finish Code	Bichromated finish Code
L.-h.	H00901.21.93	H00901.21.04
R.-h.	H00901.20.93	H00901.20.04